linear canopy

Linear C-Curved Canopy

Total graphic area: 124"w X 24"d
Total visual area: 120"w X 20"d

Please be sure to include the 2" bleed around the perimeter of the graphic. Do not design any critical elements (text, logos, etc.) within 1" of the edge (see dotted line and gray area).

Please extend bleed all the way out to the black border.

Please note that graphic will have holes cut and finished in the bottom panel for the linear extrusion. We recommend making your canopy graphic a solid color or an abstract image due to these elements.
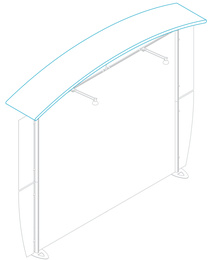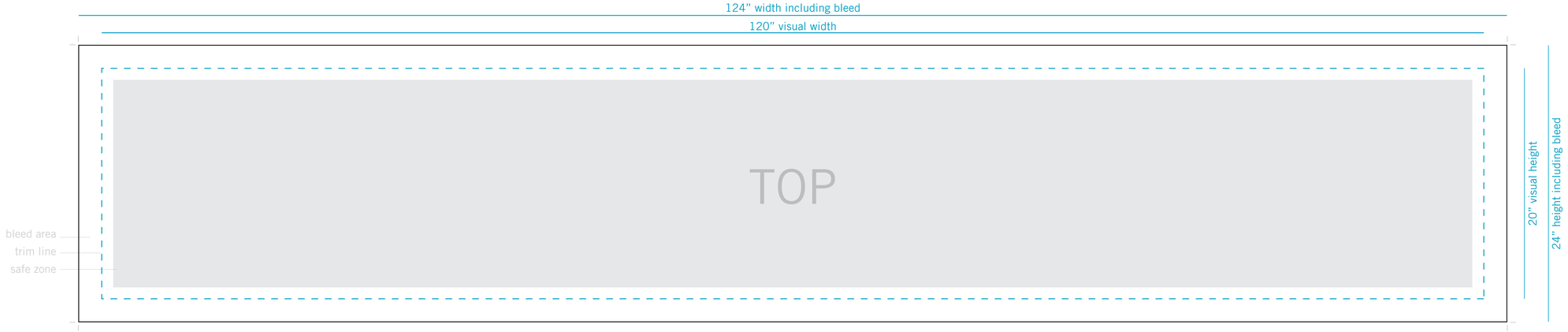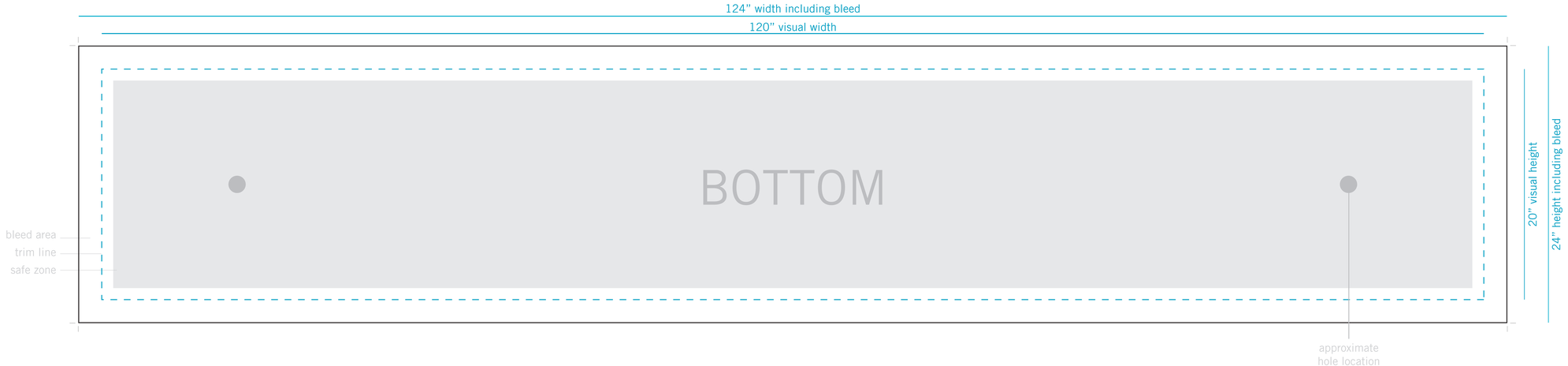
General Artwork Guidelines
- cmyk color mode
- do not embed images, supply them
- resolution must be 100-120 ppi
- all fonts must be created to outlines