20′ Modulate Kit 03:
Frame 11 w/ Rounded Left Corner

TEMPLATE @ 1/2 SIZE
Total graphic area: 47.5″w X 96.25″h
Total finished area: 43.5″w X 92.25″h

Please be sure to include the 2″ bleed around the perimeter (note trim & stitch locations on template). DO NOT design any critical elements (text, logos, etc.) within 2″ of the edge.

General Art Guidelines:

– CMYK Color Mode

– All Solid Coated Pantone colors should be called out in the art as spot colors

– Embed all images and support files

– Resolution must be 200-240 ppi @ 1/2 size, 100-120 at full size

– All fonts must be created to outlines

– Do not scale artboard

– Background color/images must bleed to the edge of artboard

– Do not use spot colors from template in your artwork as they will not print

20′ Modulate Kit 03:
Frame 10

TEMPLATE @ 1/2 SIZE
Total graphic area: 36.5″w X 100.25″h
Total finished area: 32.5″w X 96.25″h

Please be sure to include the 2″ bleed around the perimeter (note trim & stitch locations on template). DO NOT design any critical elements (text, logos, etc.) within 2″ of the edge.

General Art Guidelines:

– CMYK Color Mode

– All Solid Coated Pantone colors should be called out in the art as spot colors

– Embed all images and support files

– Resolution must be 200-240 ppi @ 1/2 size, 100-120 at full size

– All fonts must be created to outlines

– Do not scale artboard

– Background color/images must bleed to the edge of artboard

– Do not use spot colors from template in your artwork as they will not print

20′ Modulate Kit 03:
Frame 07

TEMPLATE @ 1/2 SIZE
Total graphic area: 94.25″w X 96.25″h
Total finished area: 90.25″w X 92.25″h

Please be sure to include the 2″ bleed around the perimeter (note trim & stitch locations on template). DO NOT design any critical elements (text, logos, etc.) within 2″ of the edge.

General Art Guidelines:

– CMYK Color Mode

– All Solid Coated Pantone colors should be called out in the art as spot colors

– Embed all images and support files

– Resolution must be 200-240 ppi @ 1/2 size, 100-120 at full size

– All fonts must be created to outlines

– Do not scale artboard

– Background color/images must bleed to the edge of artboard

– Do not use spot colors from template in your artwork as they will not print

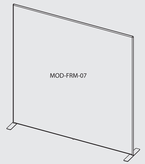

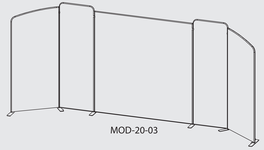

20′ Modulate Kit 03:
Frame 10

TEMPLATE @ 1/2 SIZE
Total graphic area: 36.5″w X 100.25″h
Total finished area: 32.5″w X 96.25″h

Please be sure to include the 2″ bleed around the perimeter (note trim & stitch locations on template). DO NOT design any critical elements (text, logos, etc.) within 2″ of the edge.

General Art Guidelines:

– CMYK Color Mode

– All Solid Coated Pantone colors should be called out in the art as spot colors

– Embed all images and support files

– Resolution must be 200-240 ppi @ 1/2 size, 100-120 at full size

– All fonts must be created to outlines

– Do not scale artboard

– Background color/images must bleed to the edge of artboard

– Do not use spot colors from template in your artwork as they will not print

20′ Modulate Kit 03:
Frame 11 w/ Rounded Right Corner

TEMPLATE @ 1/2 SIZE
Total graphic area: 47.5″w X 96.25″h
Total finished area: 43.5″w X 92.25″h

Please be sure to include the 2″ bleed around the perimeter (note trim & stitch locations on template). DO NOT design any critical elements (text, logos, etc.) within 2″ of the edge.

General Art Guidelines:

– CMYK Color Mode

– All Solid Coated Pantone colors should be called out in the art as spot colors

– Embed all images and support files

– Resolution must be 200-240 ppi @ 1/2 size, 100-120 at full size

– All fonts must be created to outlines

– Do not scale artboard

– Background color/images must bleed to the edge of artboard

– Do not use spot colors from template in your artwork as they will not print

20’ Modulate Kit 03:
Frame 11 w/ Rounded Left Corner

TEMPLATE @ 1/2 SIZE
Total graphic area: 47.5”w X 96.25”h
Total finished area: 43.5”w X 92.25”h

Please be sure to include the 2” bleed around the perimeter (note trim & stitch locations on template). DO NOT design any critical elements (text, logos, etc.) within 2” of the edge.

General Art Guidelines:

– CMYK Color Mode

– All Solid Coated Pantone colors should be called out in the art as spot colors

– Embed all images and support files

– Resolution must be 200-240 ppi @ 1/2 size, 100-120 at full size

– All fonts must be created to outlines

– Do not scale artboard

– Background color/images must bleed to the edge of artboard

– Do not use spot colors from template in your artwork as they will not print

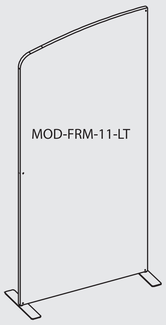

20’ Modulate Kit 03:
Frame 10

TEMPLATE @ 1/2 SIZE
Total graphic area: 36.5”w X 100.25”h
Total finished area: 32.5”w X 96.25”h

Please be sure to include the 2” bleed around the perimeter (note trim & stitch locations on template). DO NOT design any critical elements (text, logos, etc.) within 2” of the edge.

General Art Guidelines:

– CMYK Color Mode

– All Solid Coated Pantone colors should be called out in the art as spot colors

– Embed all images and support files

– Resolution must be 200-240 ppi @ 1/2 size, 100-120 at full size

– All fonts must be created to outlines

– Do not scale artboard

– Background color/images must bleed to the edge of artboard

– Do not use spot colors from template in your artwork as they will not print

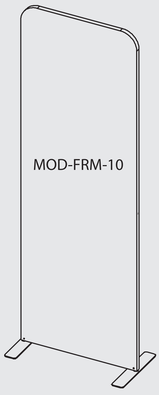

20’ Modulate Kit 03:
Frame 07

TEMPLATE @ 1/2 SIZE
Total graphic area: 94.25”w X 96.25”h
Total finished area: 90.25”w X 92.25”h

Please be sure to include the 2” bleed around the perimeter (note trim & stitch locations on template). DO NOT design any critical elements (text, logos, etc.) within 2” of the edge.

General Art Guidelines:

– CMYK Color Mode

– All Solid Coated Pantone colors should be called out in the art as spot colors

– Embed all images and support files

– Resolution must be 200-240 ppi @ 1/2 size, 100-120 at full size

– All fonts must be created to outlines

– Do not scale artboard

– Background color/images must bleed to the edge of artboard

– Do not use spot colors from template in your artwork as they will not print

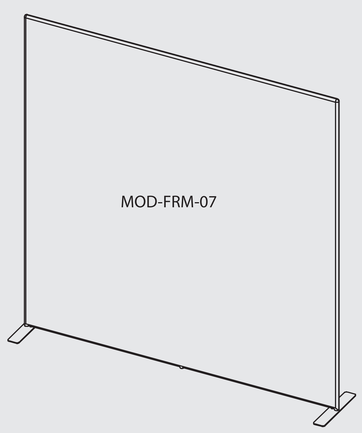

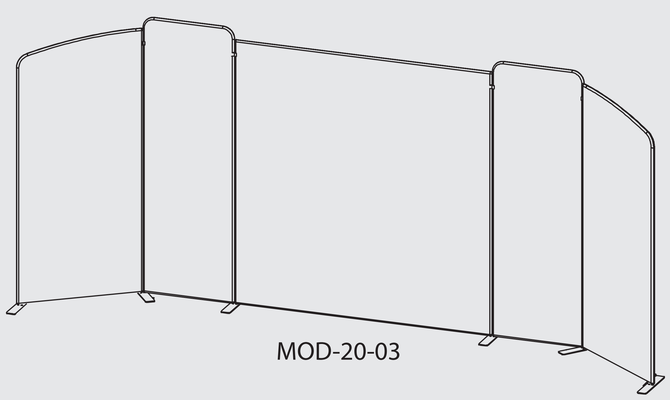

20’ Modulate Kit 03:
Frame 10

TEMPLATE @ 1/2 SIZE
Total graphic area: 36.5”w X 100.25”h
Total finished area: 32.5”w X 96.25”h

Please be sure to include the 2” bleed around the perimeter (note trim & stitch locations on template). DO NOT design any critical elements (text, logos, etc.) within 2” of the edge.

General Art Guidelines:

– CMYK Color Mode

– All Solid Coated Pantone colors should be called out in the art as spot colors

– Embed all images and support files

– Resolution must be 200-240 ppi @ 1/2 size, 100-120 at full size

– All fonts must be created to outlines

– Do not scale artboard

– Background color/images must bleed to the edge of artboard

– Do not use spot colors from template in your artwork as they will not print

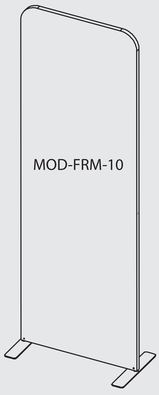

20’ Modulate Kit 03:
Frame 11 w/ Rounded Right Corner

TEMPLATE @ 1/2 SIZE
Total graphic area: 47.5”w X 96.25”h
Total finished area: 43.5”w X 92.25”h

Please be sure to include the 2” bleed around the perimeter (note trim & stitch locations on template). DO NOT design any critical elements (text, logos, etc.) within 2” of the edge.

General Art Guidelines:

– CMYK Color Mode

– All Solid Coated Pantone colors should be called out in the art as spot colors

– Embed all images and support files

– Resolution must be 200-240 ppi @ 1/2 size, 100-120 at full size

– All fonts must be created to outlines

– Do not scale artboard

– Background color/images must bleed to the edge of artboard
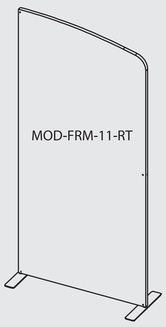
– Do not use spot colors from template in your artwork as they will not print