hybrid pro modular kit

Hybrid Pro Modular Kit 17

File @ 25% of actual size
Dye Sub Graphic Structure C1, C2, D1, D2 (Double sided)
Outside Dimension
Total Graphic Area: 122.56”w x 55.25”h
Finished Graphic Area: 112.56”w x 47.25”h
Inside Dimension
Total graphic Area: 120.75”w x 55.25”h
Finished Graphic Area: 110.75”w x 47.25

Dye Sub Graphic Structure A1, A2, F1, F2 (Double sided)
Outside Dimension
Total Graphic Area: 119.5”w x 22”h
Finished Graphic Area: 109.5”w x 12”h
Inside Dimension
Total graphic Area: 117.31”w x 22”h
Finished Graphic Area: 107.31”w x 12”h

Dye Sub Fabric Panel B and E
Total Graphic Area: 39.3”w 90.48”h
Finished Graphic Area: 35.3”w x 86.48”h

Dye Sub Fabric Panel M and N
Total Graphic Area: 98.25”w 98.25”h
Finished Graphic Area: 94.25”w x 94.25”h

UV Graphic J, K, L
Total Graphic Area: 38.25”w x 36.18”h
Finished Graphic Area: 37.25”w x 35.18”h

UV Graphic G, H, I
Total Graphic Area: 19”w x 50”h
Finished Graphic Area: 18”w x 49”h
Graphic must be mirrored if designing
as double sided.

Please be sure to include a 2” bleed
around the perimeter of panel B1, B2, C1 and
C2 and 5” bleed for the fabric structures.

Please consider obstructions and spaces
created by the extrusions when designing
your graphics.
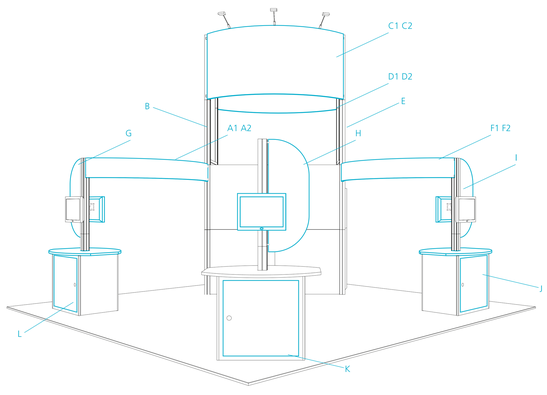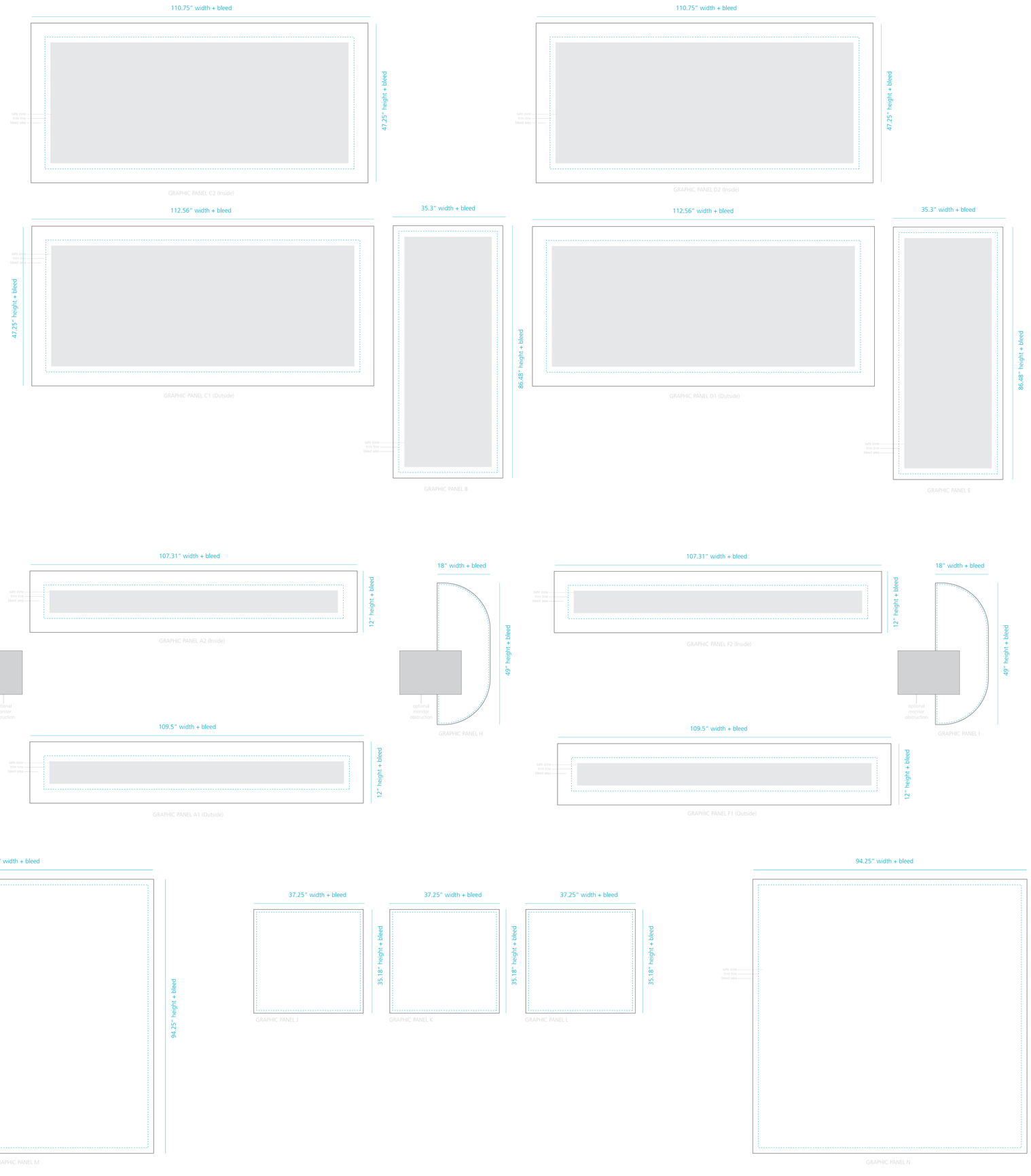
General Artwork Guidelines
- cmyk color mode
- do not embed images, supply them
- resolution must be 100-120ppi
- all fonts must be created to outlines
- do not design any critical elements
  near the extrusions or on the corner curve