# vibe

Vibe Kit 06

Background Graphic Template
Total graphic area: 118”w X 95.5”h
Total visual opening: 114”w X 91.5”h

Please be sure to include the 2” bleed around the perimeter to compensate for the finishing of large graphics. Do not design any critical elements (text, logos, etc.) within 2” of the edge (see dotted lines).
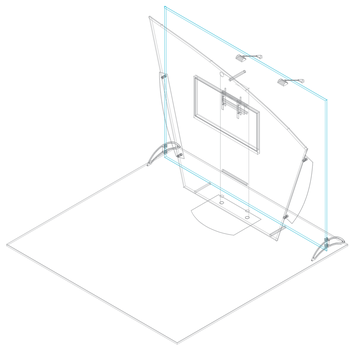
General Artwork Guidelines
- cmyk color mode
- do not embed images, supply them
- resolution must be 100-120 ppi
- all fonts must be created to outlines