Embrace SEG Hopup

A variety of sizes, kits and options of displays are available.

Embrace™ is a sleek collapsible portable display and it delivers style with minimal effort. Embrace Fabric Displays come in a variety of sizes and is offered with or without endcaps. Embrace requires no tools for assembly, is lightweight and highly portable. It packs away as easy as it sets up!

Stabilizer feet on all frames 3 quads high

Easy push-fit fabric graphics go into channels

We are continually improving and modifying our product range and reserve the right to vary the specifications without prior notice. All dimensions and weights quoted are approximate and we accept no responsibility for variance. E&OE. See Graphic Templates for graphic bleed specifications.

features and benefits:

- Lightweight anodized straight silver frame
- Stabilizer feet on all straight frames 3 quads high
- Perimeter channel bars connect to frame and hold push-fit fabric graphics
- Simple assembly
- Optional end caps available
- Rolling carry bag included for most units
- Lifetime hardware warranty against manufacturer defects
- Kit includes light clip

dimensions:

Hardware:

Assembled unit:

1x1: 30.43"w x 30.74"h x 12.92"d
773mm(w) x 781mm(h) x 328mm(d)

2x1: 59.95"w x 30.74"h x 12.92"d
1523mm(w) x 781mm(h) 328mm(d)

2x2: 59.95"h x 59.59"h x 12.92"d
1523mm(w) x 1523mm(h) x 328mm(d)

3x2: 88.15"w x 59.59"h x 12.92"
2239mm(w) x 1523(h) x 328mm(d)

1x3: 31.1"w x 88.8"h x 28.94"d
790mm(w) x 2256mm(h) x 735mm(d)

2x3: 59.95"w x 88.8"h x 28.94"d
1523mm(w) x 2256mm(h) x 735mm(d)

3x3: 88.15"w x 88.8"h x 28.94"d
2239mm(w) x 2256mm(h) x 735mm(d)

4x3: 117" x 88.8"h x 28.94"d
2972mm(w) x 2256mm(h) x 735mm(d)

Shipping:

Shipping dimensions - ships in a box:

1x1, 2x1, 1x3:
35"l x 15"h x 9"d
889mm(l) x 381mm(h) x 229mm(d)

2x2, 3x2, 2x3, 3x3, 4x3:
38"l x 15"h x 9"d
965mm(l) x 381mm(h) x 229mm(d)

Approximate Shipping weight:

1x1: 14 lbs / 6.35 kgs
2x1: 16 lbs / 7.26 kgs
2x2: 20 lbs / 9.07 kgs
3x2: 27 lbs / 12.25 kgs
1x3: 24 lbs / 10.87 kgs
2x3: 30 lbs / 13.61 kgs
3x3: 34 lbs / 15.42 kgs
4x3: 36 lbs / 16.33 kgs

Graphics

Graphic material:
Premium 100% opaque fabric with SEG

Refer to related graphic template for more information.

Visit: exhibitors-handbook.com/graphic-templates

additional information:

* Lights not included.

* Stacking units require at least one return wall.

* Do not attempt to connect frames lying on the floor. Frames must always be upright when assembling stacking configurations.

Embrace SEG Hopup Dimensions

Embrace SEG Hopup frame footprints fit in a 10’ x 10’ space.
Stabilizer feet present on all straight frames 3 quads high.

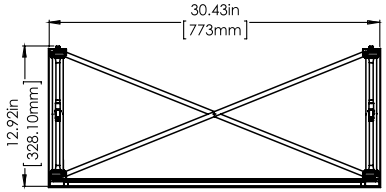

1 QUAD WIDE UNITS

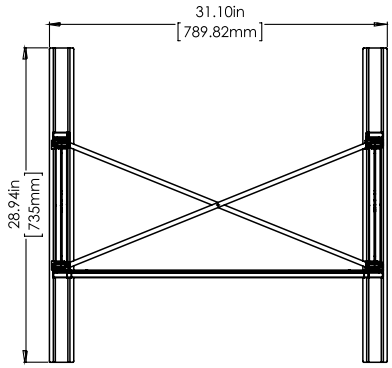

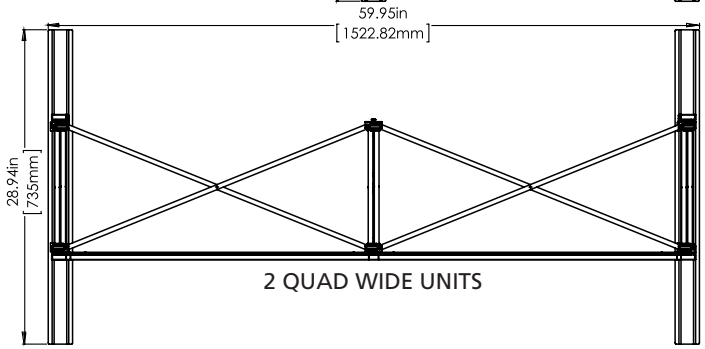

2 QUAD WIDE UNITS

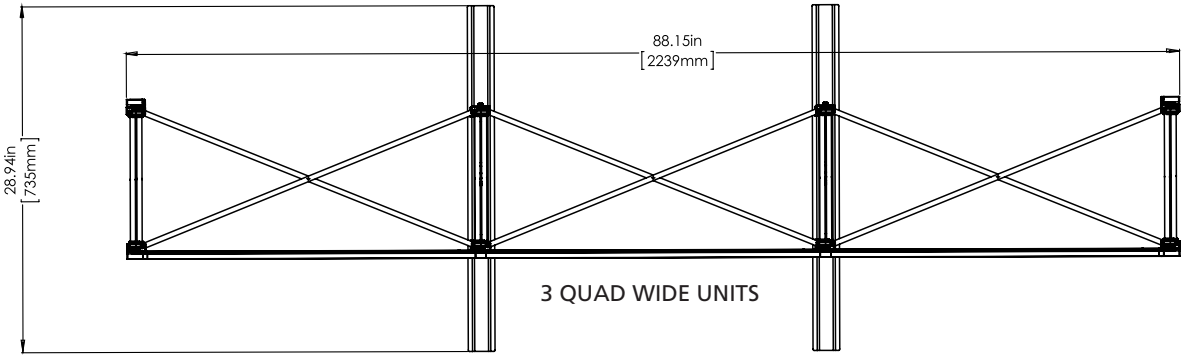

3 QUAD WIDE UNITS

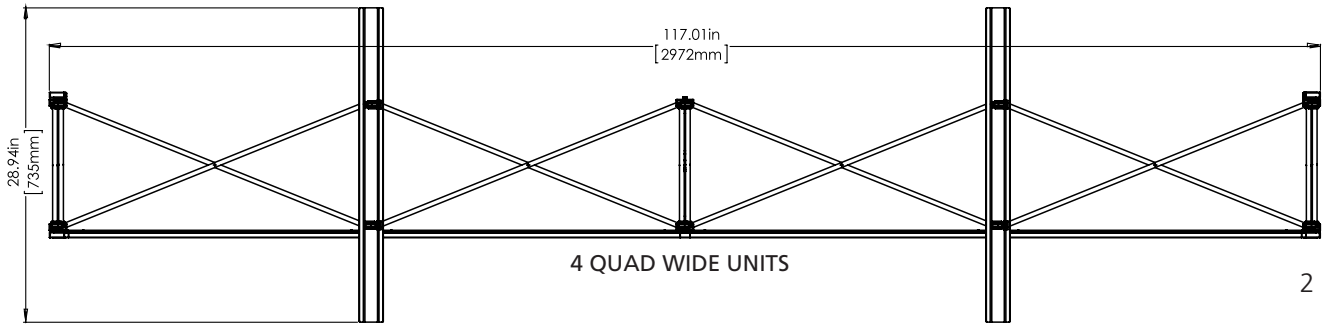

4 QUAD WIDE UNITS

SET-UP:

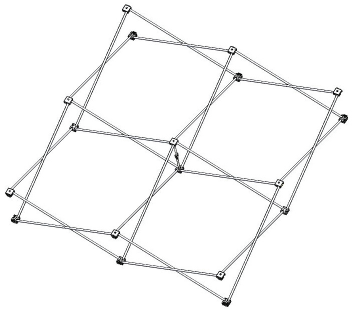

Begin assembly with frame flat on floor. 1

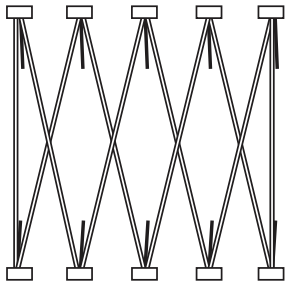

Stretch frame to size. 2

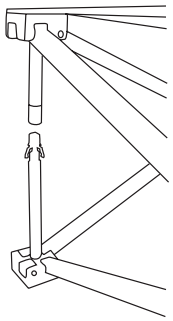

Snap all locking arms into place. 3

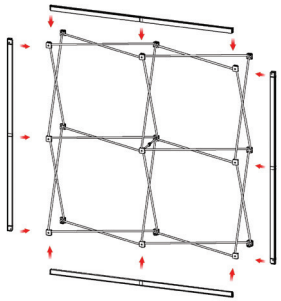

Slide bungee channel bars onto front face of frame starting with the left and right sides. 4

Then slide on bottom and top channel bars. 5

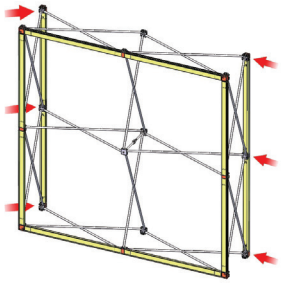

Stand upright and add rear left and right channel bars. There are no top and bottom channel bars for rear. 6

APPLY GRAPHIC:

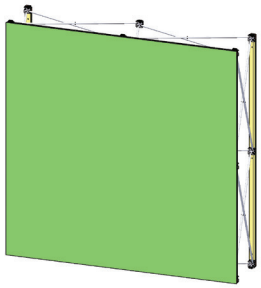

Slide FCE graphic into channels located on the front side of the channel bars. 7

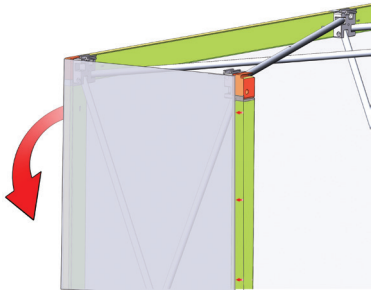

Insert FCE graphic end caps into side facing channels. 8

ATTACH STABILIZER FEET TO FRAMES 3 QUADS HIGH

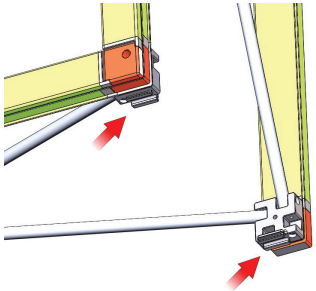

Located dovetail clips on the bottom of the assembly. 1

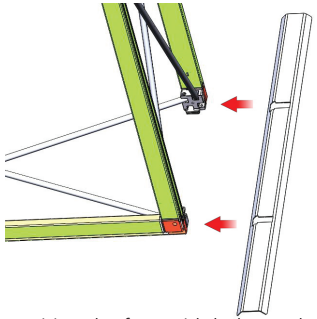

Position the foot with hole notch facing the assembly. Slide the dove tail through the notches completely 2

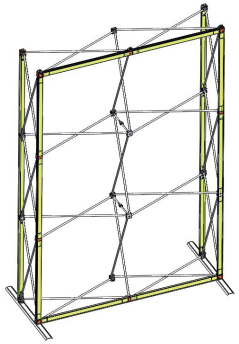

Repeat on opposite side and check stability of assembly. 3

Unit is complete

ATTACH OPTIONAL LIGHTS:

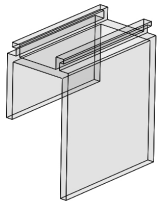

Locate the light clip with dovetail. 1

Locate the dovetail channel on the bottom of the base of the spotlight. 2

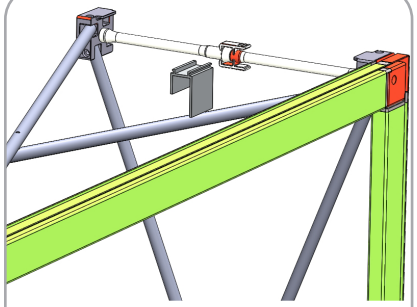

Slide the light clip onto the frame top channel until symmetrically centered and secured. 3

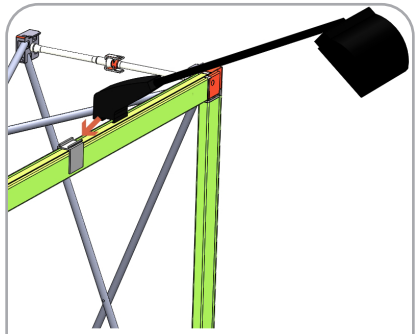

Slide the light onto the clip until symmetrically centered and secured. 4

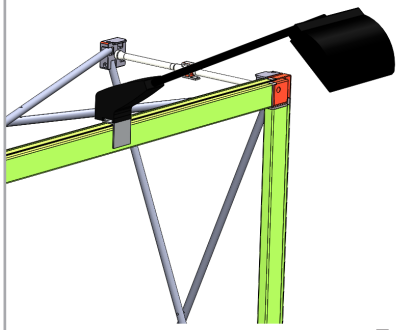

Light setup complete. 5